PRESSURE INDICATORS PZ-30

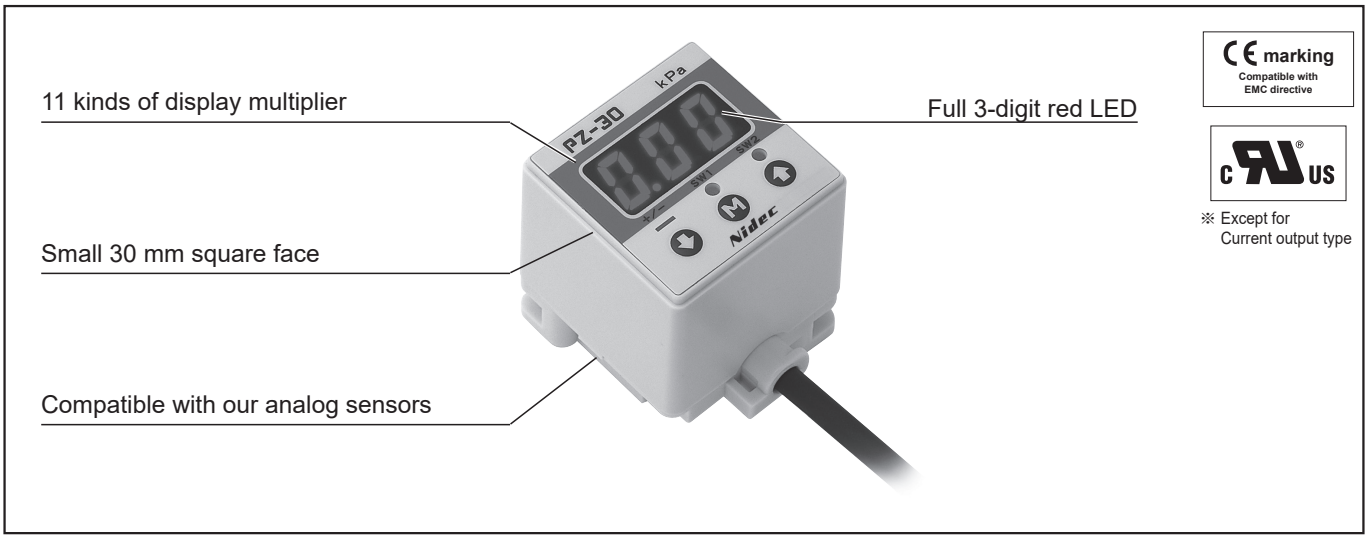

FEATURES

- **Pressure indicators separated from sensor**
  - Can be used with variety of sensors
- **Wide range of applications such as pneumatic equipment or semiconductor equipment**
- **Any range of pressure sensors is available**
- **Low power consumption by non display mode**
- **Set data protection by panel lock function**

MODEL NUMBER DESIGNATION

P Z - 3 0 - N V S T I

Series name

Switch output interface
N : NPN open collector
P : PNP open collector

Input signal type
V : 1 ~ 5 V
I : 4 ~ 20 mA

Sensor connection type
ST : One-touch type terminal
CN : Connector type terminal

Analog output
Blank : Voltage output
I : Current output

LIST OF MODEL NUMBERS

Analog output	Switch output type	Input signal type	Sensor connection type	
			One-touch type terminal	Connector type terminal
Analog output	NPN	1 ~ 5 V	PZ-30-NVST	PZ-30-NVCN
		4 ~ 20 mA	PZ-30-NIST	PZ-30-NICN
	PNP	1 ~ 5 V	PZ-30-PVST	PZ-30-PVCN
		4 ~ 20 mA	PZ-30-PIST	PZ-30-PICN
Analog Current output	NPN	1 ~ 5 V	➔ PZ-30-NVSTI	
		4 ~ 20 mA	➔ PZ-30-NISTI	
	PNP	1 ~ 5 V	➔ PZ-30-PVSTI	
		4 ~ 20 mA	➔ PZ-30-PISTI	

※ Verify the above model numbers when placing orders.
Marked ➔ is manufactured upon receipt of order basis.

STANDARD SPECIFICATIONS

● Unless otherwise specified, the specs are defined at an ambient temperature of 25 ± 5 °C and excitation voltage of 24 VDC.

Item		Model number	PZ-30
General specifications	Operating temp. range	°C	− 10 ~ 50
	Operating humidity	%RH	35 ~ 85
	Protection grade		IP40
	Storage temp.	°C	− 20 ~ 70
	Net weight	g	Approx. 80 (Including 2 m cable)
	Insulation resistance		100 MΩ minimum
	Dielectric strength		500 VAC 1 minute
	Supply voltage		10.8 ~ 30 VDC (Including ripple percentage) ※
	Consumption current		50 mA maximum
Imput	Input signal		1 ~ 5 V (V) / 4 ~ 20 mA (I)
	Input impedance		10 kΩ (V) / 250 Ω (I)
Display	No. of digit		3
	Display element		LED
	Display cycle		Approx. 4 times/s
	Negative pressure display		"–" LED is ON
	Display accuracy		± 1 %F.S. (Without sensor's error)
	Thermal error		± 0.5 % (0 ~ 50 °C, Reference temp. 25 °C)
	Resolution		1 count
Switch	Output status		NPN/PNP
			2-point output (Transistor, Open collector output)
	Switching capacity		30 VDC 100 mA maximum
	Residual voltage		1.2 V maximum (NPN), 2.2 V maximum (PNP)
	Hysteresis setting		0 ~ 300 counts Adjustable
	Repeatability		± 0.2 %F.S. ± 1 count
	Short circuit protection		With protection function
	Response		Approx. 5 ms ("F – 0") (Selectable 5 ms ~ 2.5 s)
	Thermal error		± 0.5 %F.S. (0 ~ 50 °C, Reference temp. 25°C)
	State indication		Output 1 (Green LED), Output 2 (Red LED) Lighted when output is ON.
Analog output	Voltage output		1 ~ 5 V
	Current output		4 ~ 20 mA(Load resistance 500 Ω minimum)

※ When analog current output type of PZ30 is chosen or when a sensor of current output type is connected, supply voltage is 24 VDC ± 10 %.

ENVIRONMENTAL CHARACTERISTICS

Test item	Test conditions	Permissible change
Vibration	10 ~ 500 Hz, 98.1 m/s² or 1.5 mm P-P, 3 directions for 2 hours each	Pressure indication, switch operating points and analog output variation : ± 1 %F.S. maximum each after test
Shock	490 m/s², 3 directions for 3 times each	
Moisture resistance	40 °C, 90 ~ 95 %RH, 240 hrs.	

PZ-30
PRESSURE INDICATORS

■ INTERNAL ELECTRICAL SCHEMATICS

● Voltage analog output

· Current input NPN output

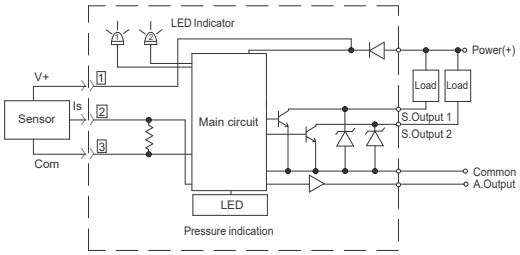

· Current input PNP output

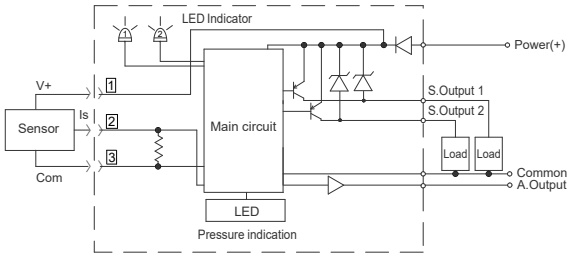

· Voltage input NPN output

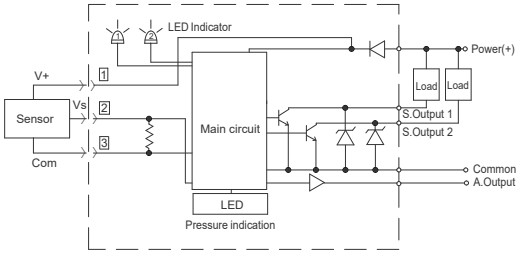

· Voltage input PNP output

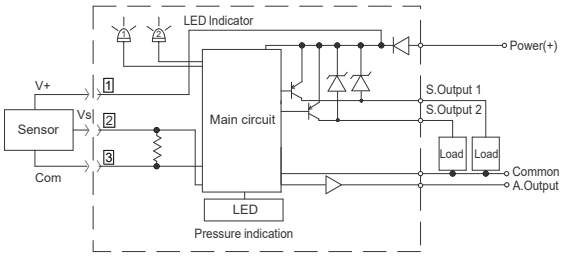

※ When connecting the 2-wire type of current output sensors, please do not connect the 3 (Com.) terminal.

● Current analog output

· Current input NPN output

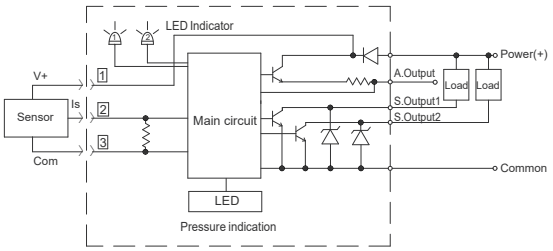

· Current input PNP output

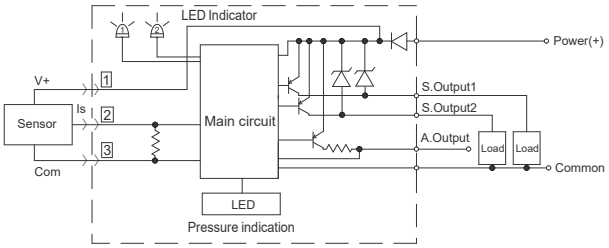

· Voltage input NPN output

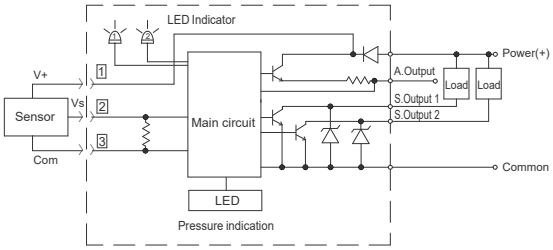

· Voltage input PNP output

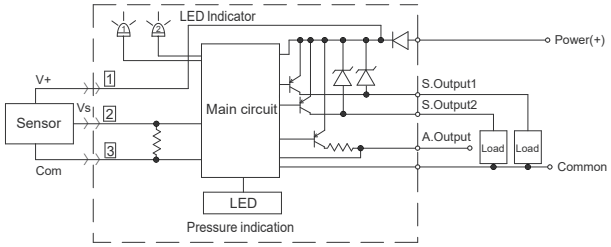

※ When connecting the 2-wire type of current output sensors, please do not connect the 3 (Com.) terminal.
(Note) Refer to the PIN allocation for the rear terminal number of the PZ-30 and the connector pin terminal number.
(Please from the table on dimension drawing)

ANALOG OUTPUT MODE

● Analog output setting : The second figure in triple digits LED indicates output mode in the initial setting.
Output mode is fixed by rated pressure.

Analog output		−Pr 0 Pr
Code	Output mode	←→
"1"	R mode (Compound)	1 V (4 mA) → (Vzero) → 5 V (20 mA)
"2"	G mode (Positive)	1 V (4 mA) → 5 V (20 mA)
"3"	V mode (Negative)	5 V (20 mA) → 1 V (4 mA)

SWITCH OUTPUT MODE

● Switch output can be set when blinking red LED indicates (SW2) in the initial setting.
● The mode is set at "Separate (H/H), 1" prior to shipment. The mode is initialized at "Separate (L/L), 4" when rated pressure is set at "-12P" or "-12F" (negative pressure).

Output	SW1				SW2			
Mode	Separate		Window comparator		Separate		Window comparator	
Operation	HI	LO	A	B	HI	LO	A	B
S-1	○				○			
S-2	○					○		
S-3		○			○			
S-4		○				○		
C-5			○				○	
C-6			○					○
C-7				○			○	
C-8				○				○
Pressure setting (Operating point)	Setting 1		(Lower limit) : Setting 1 (Upper limit) : Setting 2		Setting 2		(Lower limit) : Setting 1 (Upper limit) : Setting 2	

Separate mode	Window comparator mode
(HI operation)	(A operation)
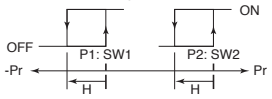	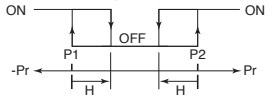
(LO operation)	(B operation)
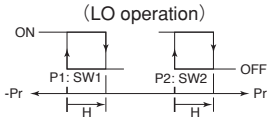	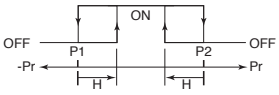
P1≦P2 or P1≧P2	P1≦P2–2H

H：Switch hysteresis、
P1＝Setting 1、P2＝Setting 2

Note 1. In the Separate Mode, setting 1 corresponds to SW1, and Setting 2 corresponds to SW2.
Note 2. In the Window Comparator Mode, the minimum value for SW1 and SW2 corresponds to Setting 1 and the maximum value corresponds to Setting 2.

SELECTION OF DISPLAY MULTIPLIER/RATED PRESSURE

Selection of display multiplier

- Please set any code when blinking red LED indicates negative pressure in the initial setting.
- Display multiplier is set at “1” (kPa) prior to shipment.

Selection of rated pressure

- Please set any code when blinking red LED indicates negative pressure, SW1, SW2 in the initial setting.
- Rated pressure is set at “12P” (0~100 kPa) prior to shipment.

Mode (1/3)		Pressure reference	Gauge/Absolute										
		Pressure unit	kPa										MPa
Display multiplier		Rated pressure range	0 ~ 10	0 ~ 35	0 ~ 50	0 ~ -100	0 ~ 100	0 ~ 350	0 ~ 500	0 ~ 600	0 ~ 700	0 ~ 1000	0 ~ 2.00
Code	Multiplier	Setting code	“11P”	“41P”	“51P”	“-12P”	“12P”	“42P”	“52P”	“62P”	“72P”	“13P”	“23P”
“1”	× 1 (kPa)	Rated pressure display (P_L ~ P_H)	0.00 9.99	0.0 35.0	0.0 50.0	0.0 -99.9	0.0 99.9	0 350	0 500	0 600	0 700	0 999	
“2”	× 0.0102		0.00 0.10	0.00 0.35	0.00 0.51	0.00 -1.02	0.00 1.02	0.00 3.57	0.00 5.10	0.00 6.12	0.00 7.14	0.00 9.99	0.0 20.4
“3”	× 10.2		0.0 99.9	0 357	0 510	0 -999	0 999						
“4”	× 7.501		0.0 75.0	0 262	0 375	0 -750	0 750						
“5”	× 102		0 999										
“6”	× 0.01		0.00 0.10	0.00 0.35	0.00 0.50	0.00 -1.02	0.00 1.02	0.00 3.50	0.00 5.00	0.00 6.00	0.00 7.00	0.00 9.99	0.0 20.0
“7”	× 10		0.0 99.9	0 350	0 500	0 -999	0 999						
“8”	× 0.145		0.00 1.45	0.00 5.07	0.00 7.25	0.0 -14.5	0.0 14.5	0.0 50.7	0.0 72.5	0.0 87.0	0 101	0 145	0 290
“9”	× 0.000145												0.00 0.29
“A”	× 0.001 (MPa)											0.00 1.00	0.00 2.00
“b”	× 0.2953		0.00 2.95	0.0 10.3	0.0 14.7	0 -29.5	0 29.5	0 103	0 147	0 177	0 206	0 295	0 590

Mode (2/3)		Pressure reference	Gauge/Absolute					Compound						
		Pressure unit	MPa					kPa						
Display multiplier		Rated pressure range	0 ~ 3.50	0 ~ 5.00	0 ~ 10.0	0 ~ 20.0	0 ~ 35.0	-10 ~ 10	-100 ~ 100	-100 ~ 200	-100 ~ 300	-100 ~ 500	-100 ~ 600	-100 ~ 1000
Code	Multiplier	Setting code	“43P”	“53P”	“14P”	“24P”	“44P”	“11r”	“12r”	“22r”	“32r”	“52r”	“62r”	“13r”
“1”	× 1 (kPa)	Rated pressure display (P_L ~ P_H)						-9.99 9.99	-99.9 99.9	-100 200	-100 300	-100 500	-100 600	-100 999
“2”	× 0.0102		0.0 35.7	0.0 51.0	0 102	0 204	0 357	-0.10 0.10	-1.02 1.02	-1.02 2.04	-1.02 3.06	-1.02 5.10	-1.02 6.12	-1.02 9.99
“3”	× 10.2							-99.9 99.9	-999 999					
“4”	× 7.501							-75.0 75.0	-750 750					
“5”	× 102							-999 999						
“6”	× 0.01		0.0 35.0	0.0 50.0	0.0 99.9	0 200	0 350	-0.10 0.10	-1.00 1.00	-1.00 2.00	-1.00 3.00	-1.00 5.00	-1.00 6.00	-1.00 9.99
“7”	× 10							-99.9 99.9	-999 999					
“8”	× 0.145		0 507	0 725				-1.45 1.45	-14.5 14.5	-14.5 29.0	-14.5 43.5	-14.5 72.5	-14.5 87.0	-14 145
“9”	× 0.000145		0.00 0.50	0.00 0.72	0.00 1.45	0.00 2.90	0.00 5.07							-0.01 0.14
“A”	× 0.001 (MPa)		0.00 3.50	0.00 5.00	0.00 9.99	0.00 20.0	0.00 35.0		-0.10 0.10	-0.10 0.20	-0.10 0.30	-0.10 0.50	-0.10 0.60	-0.10 1.00
“b”	× 0.2953		0 999					-2.95 2.95	-29.5 29.5	-29.5 59.0	-29.5 88.5	-29 147	-29 177	-29 295

PZ-30
PRESSURE INDICATORS

■ SELECTION OF DISPLAY MULTIPLIER/RATED PRESSURE

Mode (3/3)		Pressure reference	Gauge/Absolute								
		Pressure unit	(× 1 / 0.0102) kPa								
Display multiplier		Rated pressure range	0 ~ 0.10	0 ~ 0.35	0 ~ 0.50	0 ~ -1.00	0 ~ 1.00	0 ~ 3.50	0 ~ 5.00	0 ~ 7.00	0 ~ 10.0
Code	Multiplier	Setting code	"11F"	"41F"	"51F"	"-12F"	"12F"	"42F"	"52F"	"72F"	"13F"
"1"	× 1 (kPa)	Rated pressure display (P_L ~ P_H)	0.00 9.80	0.0 34.3	0.0 49.0	0.0 -98.0	0.0 98.0	0 343	0 490	0 686	0 980
"2"	× 0.0102		0.00 0.10	0.00 0.35	0.00 0.50	0.00 -1.00	0.00 1.00	0.00 3.50	0.00 5.00	0.00 7.00	0.00 9.99
"3"	× 10.2		0.0 99.9	0 350	0 500	0 -999	0 999				
"4"	× 7.501		0.0 73.5	0 257	0 367	0 -735	0 735				
"5"	× 102		0 999								
"6"	× 0.01		0.00 0.09	0.00 0.34	0.00 0.49	0.00 -0.98	0.00 0.98	0.00 3.43	0.00 4.90	0.00 6.86	0.00 9.80
"7"	× 10		0.0 98.0	0 340	0 490	0 -980	0 980				
"8"	× 0.145		0.00 1.42	0.00 4.97	0.00 7.10	0.0 -14.2	0.0 14.2	0.0 49.7	0.0 71.0	0.0 99.5	0 142
"9"	× 0.000145										
"A"	× 0.001 (MPa)										0.00 0.98
"b"	× 0.2953		0.00 2.89	0.0 10.1	0.0 14.4	0.0 -28.9	0.0 28.9	0 101	0 144	0 202	0 289

■ OUTLINE DIMENSION

Unless otherwise specified, tolerance: ± 0.5 (Unit: mm)

● One-touch type terminal

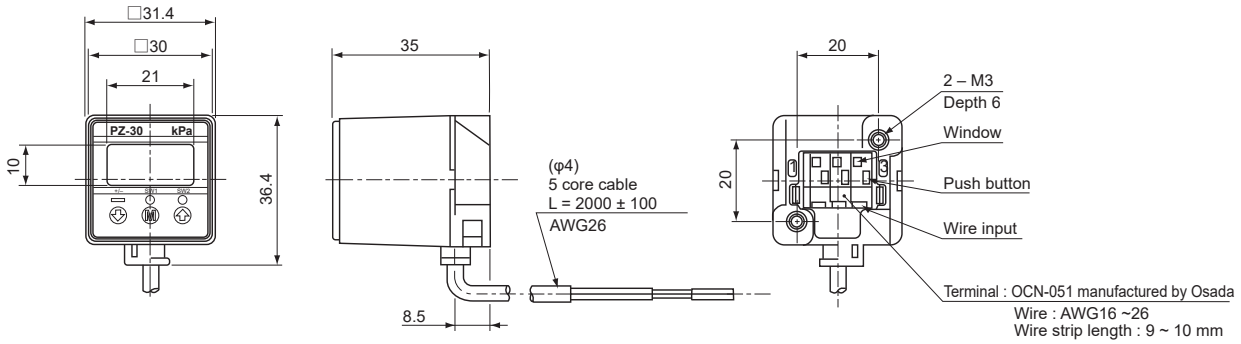

● Connector type terminal

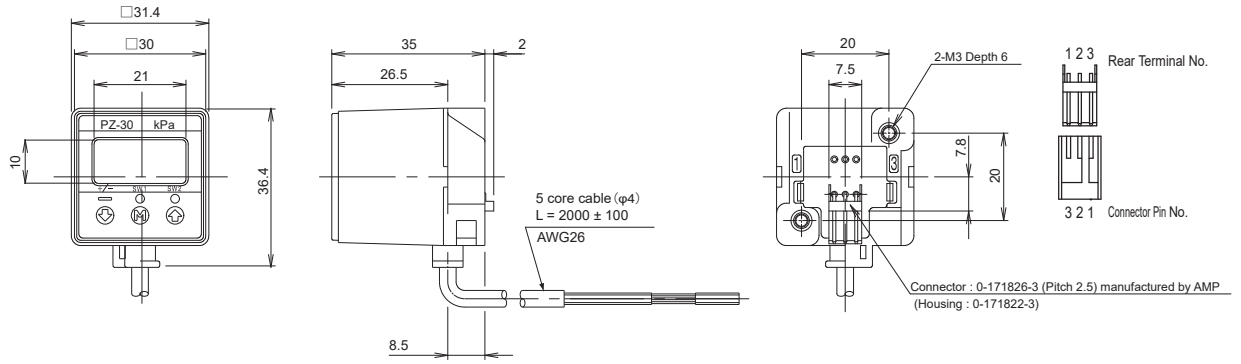

Wire color	Connection
Brown	Power ⊕
Gray	Analog output
Black	Switch output 1
White	Switch output 2
Blue	Common

Connector pin No.	Rear terminal No.	Connection of pressure sensor
3	1	V+ : Power supply voltage output (Input voltage)
2	2	Sensor signal: Voltage output Vs (1~5V) / Current output Is (4~20mA)
1	3	COMMON (※)

※ When connecting the 2-wire type of current output sensors, please do not connect the 3 (Com.) terminal.

PZ-30
PRESSURE INDICATORS

■ HOW TO MOUNT OPTIONAL ACCESSORIES <SOLD SEPERATELY>

Unless otherwise specified, tolerance: ± 0.5 (Unit: mm)

● Rear panel mounting bracket set

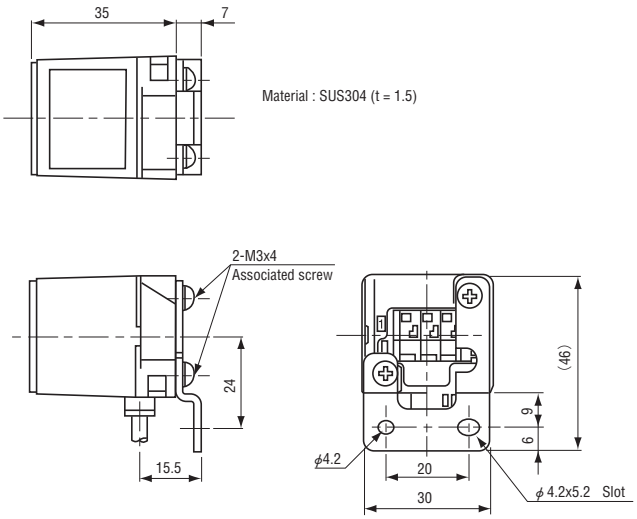

● Panel mounting bracket set

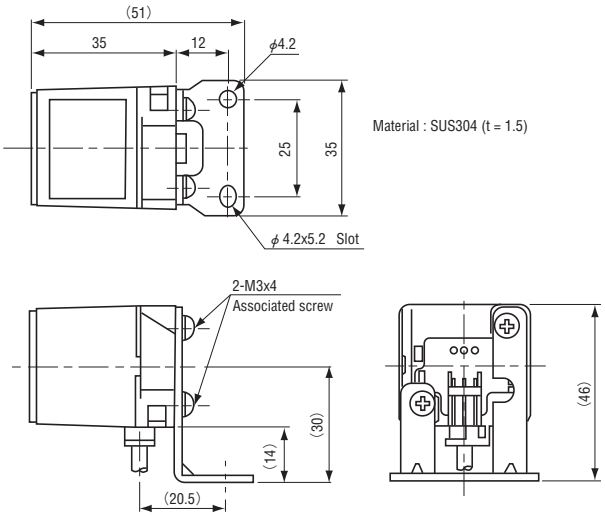

● Panel holder set

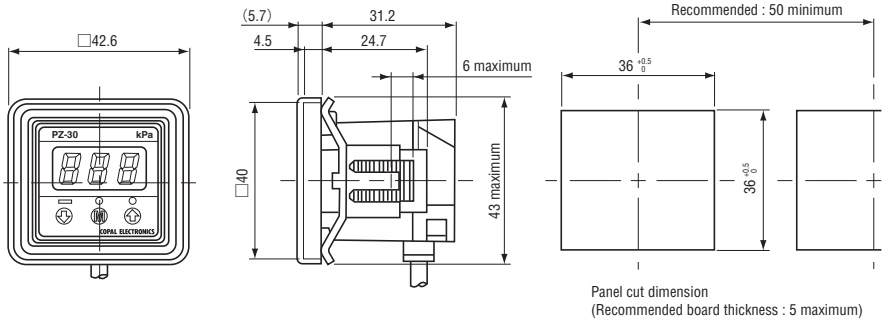

Name	Series Name	Contents
Panel holder set (PG-30/PG-35)	ACPG-003	Panel holder cover Panel holder Panel stopper (2 pcs.)
Holder cover set	ACPG-004	Panel holder cover Panel holder
Holder stopper set	ACPG-007	Panel holder Panel stopper (2 pcs.)
Rear panel bracket set (Z)	ACPG-011	Rear panel bracket set (Z) and M3 × 4, male screw (2 pcs.)
Panel bracket set (Z)	ACPG-012	Panel panel bracket set (Z) and M3 × 4, male screw (2 pcs.)